CAD-Based Aerodynamic Design of Complex Configurations Using a Cartesian Method

MARIAN NEMEC, MICHAEL AFTOSMIS
AND THOMAS PULLIAM

NASA Ames Research Center

5th Bay Area Scientific Computing Day

March 2004

Motivation

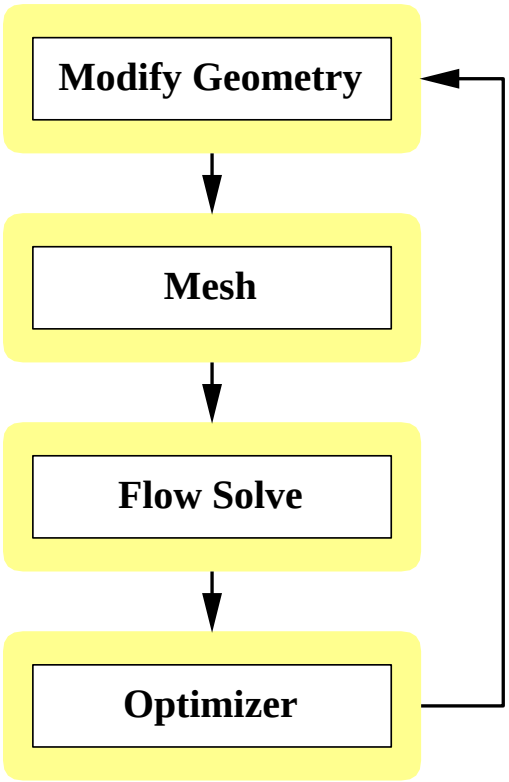

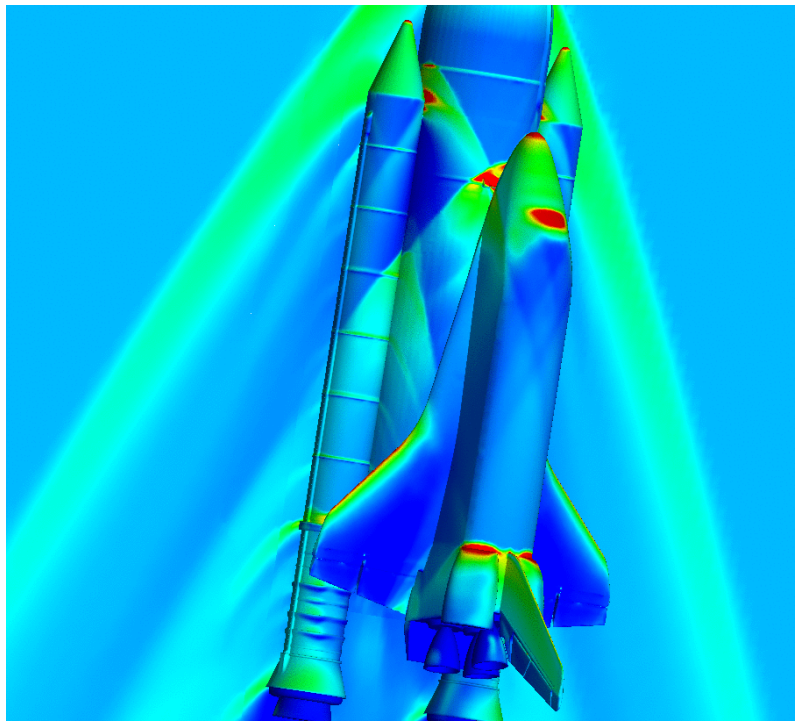

- Structured- and unstructured-mesh methods
- Euler and Navier-Stokes analysis
- **Complex geometry** $\Rightarrow$ **Cartesian methods**

Research Goals

Develop an automated optimization capability for complex-geometry aerodynamic design

- Optimization of “real-life” geometry
- Remove restrictions on small design changes
- Modular, responsive, and flexible framework
- Emphasis on parallel efficiency

$\longrightarrow$ Potential for superior and unconventional designs $\longleftarrow$

Geometry Modeling and Control

- **Leverage capabilities of parametric-CAD systems**
  - Generality: real-life geometry
  - Consistency: no geometry translation $\Rightarrow$ CAD-to-CAD design
  - Natural Constraints: capture design intent
- **Important issues**
  - Dependence on proprietary CAD kernel
  - Differentiability and mesh-perturbation approaches
  - Interface is dependent on specific CAD system

CAPRI

Computational Analysis and PRogramming Interface

⇒ Robert Haimes (MIT)

⇒ Vendor-neutral CAD interface

1. **Geometry Regeneration**
   - Allows direct manipulation of built-in CAD-model parameters
   - Different instances of parts are realized from generic models
2. **Triangulation**
   - Automated “water-tight” triangulation of solids

Used directly for Cartesian mesh generation

CAPRI

2−D Sections
B−spline Curves

↓

CAD/CAPRI

Modify and Regenerate

Triangulate

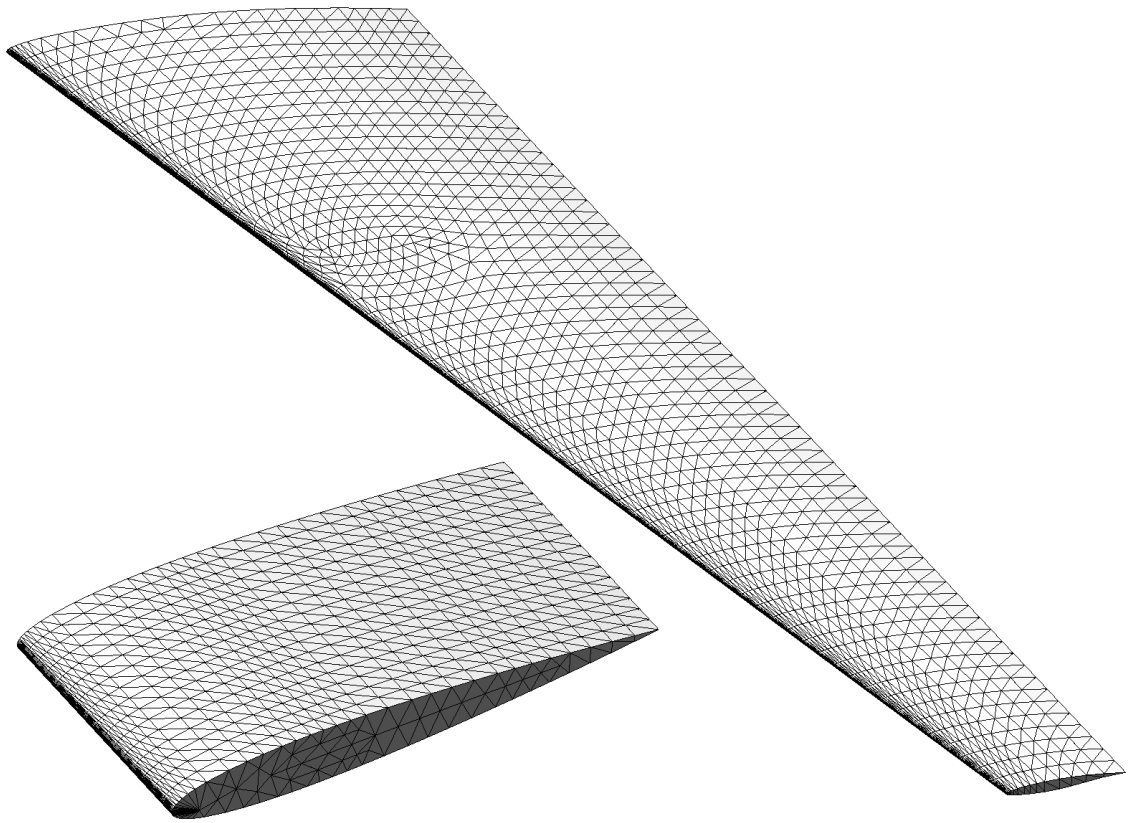

Two instances of a generic-wing CAD model

Right-triangle tessellation

Volume Mesh Generation

Strategy:

I. Component-based geometry approach

II. Embedded-boundary Cartesian mesh generation

Volume Mesh

Component-based geometry approach

1. **Components are intersected to define a wetted-surface**
   - This operation is performed outside the CAD system and is based on component triangulations
   - Fast and robust intersect algorithm
2. **Caching of component triangulations**
   - Associated triangulations are stored by CAPRI
   - Tag rigid-body motion and unchanged components
   - Minimize number of re-triangulations

Component Geometry

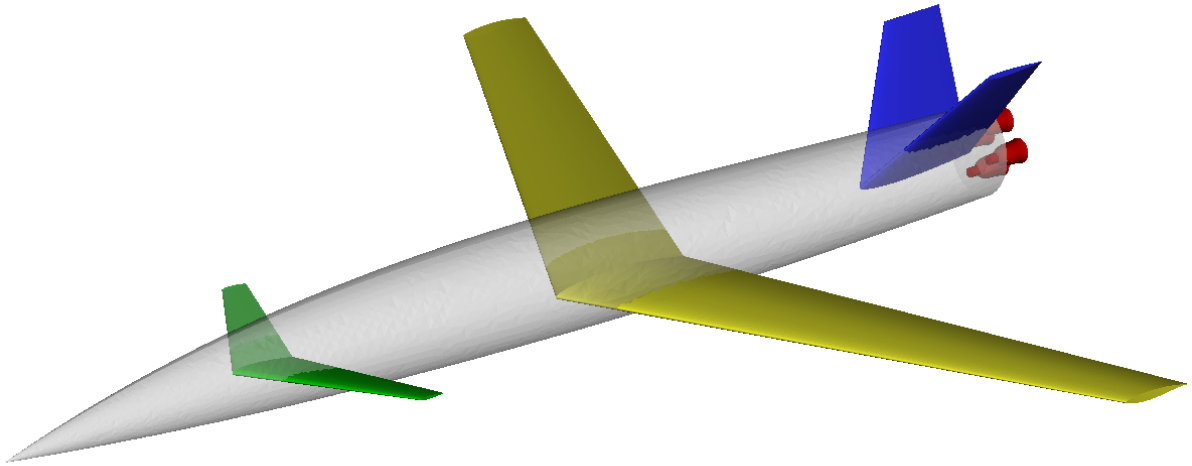

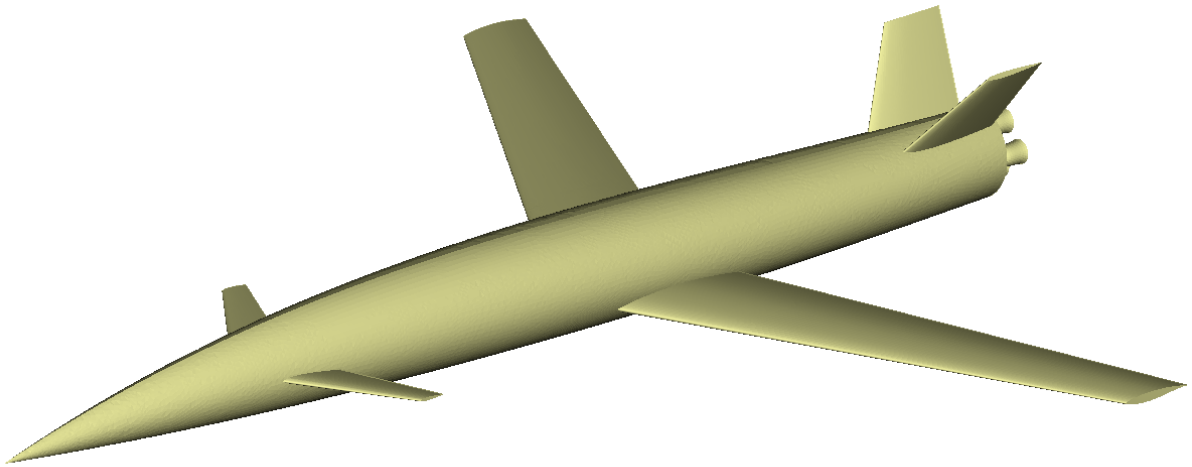

Volume Mesh

Embedded-boundary Cartesian Mesh Generation

- De-coupling of surface mesh from volume mesh
- Automated, fast, and robust mesh generator
  - Arbitrarily complex geometry
  - Generate new mesh for each design modification
    - Allows large shape deformations and topology changes
    - Avoids use of mesh-perturbation schemes

Volume Mesh

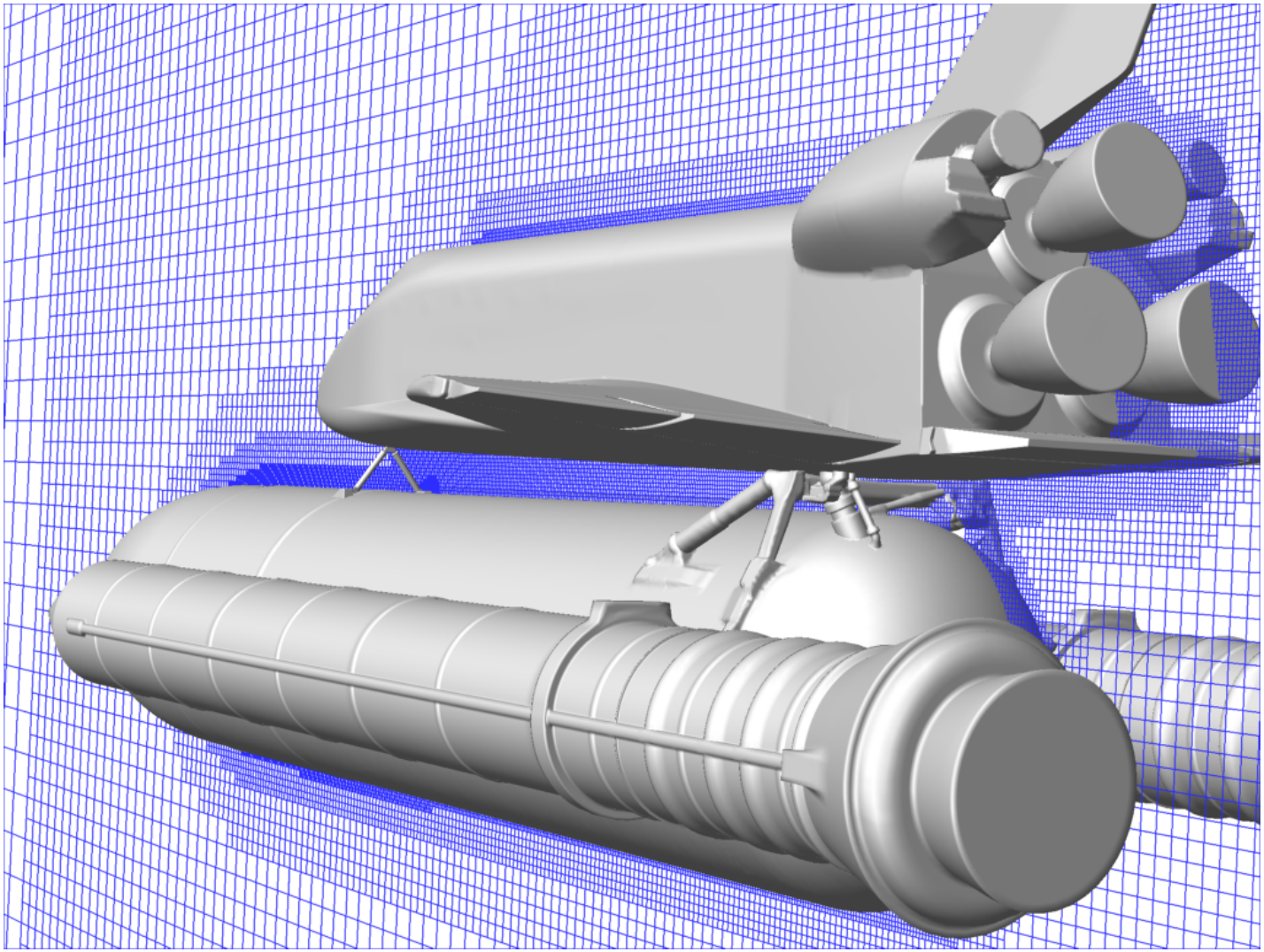

Flow Solver

- Governing equations: three-dimensional Euler equations
- Embedded boundary: body-intersecting cut-cells
- Spatial discretization: van Leer's flux vector splitting combined with Minmod or Venkatakrishnan's limiters
- Multigrid convergence acceleration
- Use of space-filling curves for domain decomposition

Parallel, scalable, and robust flow solver for complex geometry

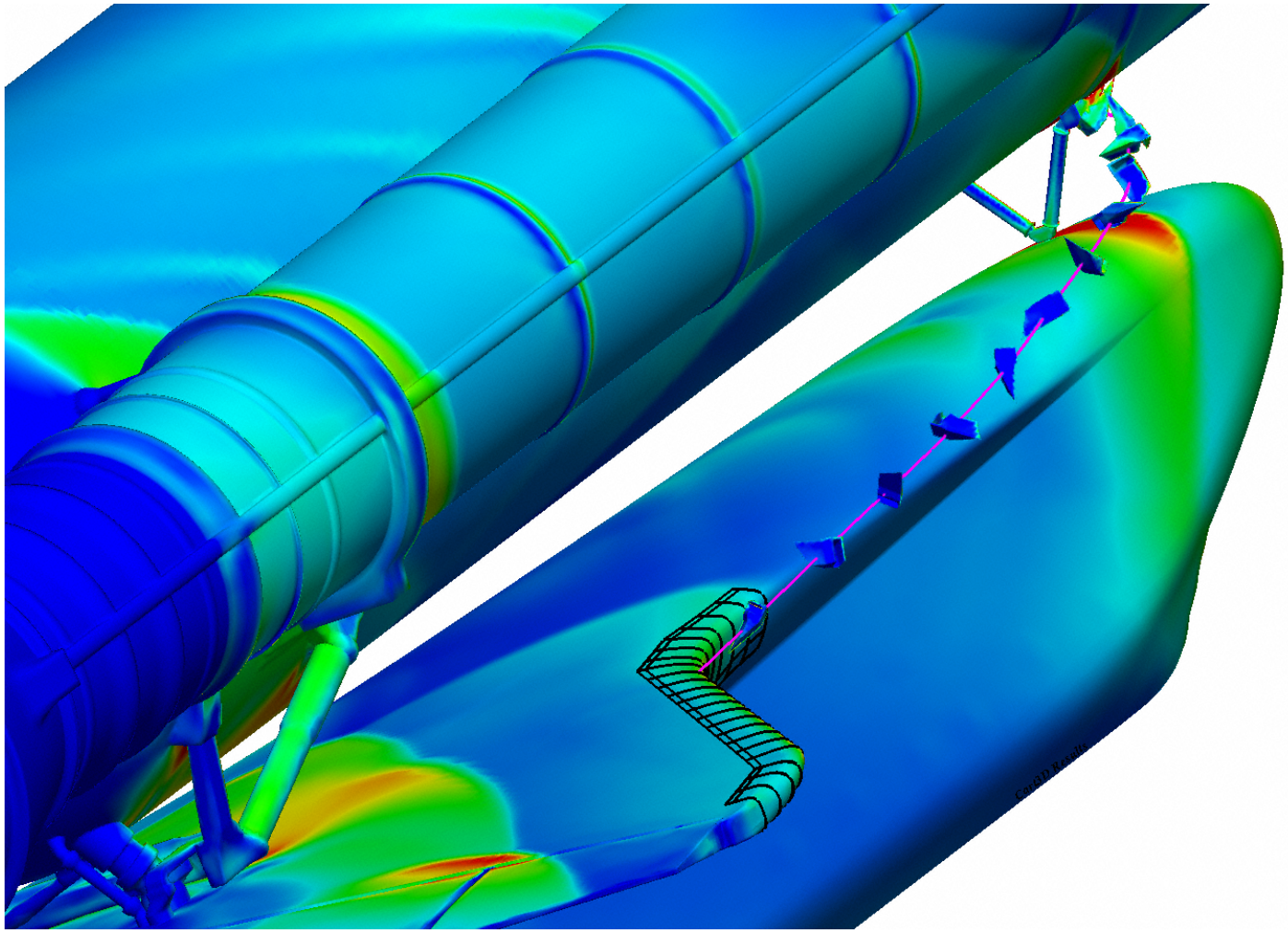

Surface Pressure, $\mathbf{M_\infty = 2.5}$, $\alpha = \mathbf{2.0^\circ}$

Courtesy of M. Aftosmis and S. Murman

Optimization Algorithms

- Genetic algorithm
- Quasi–Newton method with a backtracking line-search and central-difference gradient computations

Optimization Framework Synthesis

- Producer–Consumer Interface
  1. **Scalable geometry server:** CAD/CAPRI modules
  2. **Geometry clients:** Mesh-Generator/Flow-Solver modules

Sustain performance even when only a few (or one) CAD licenses are available

Framework

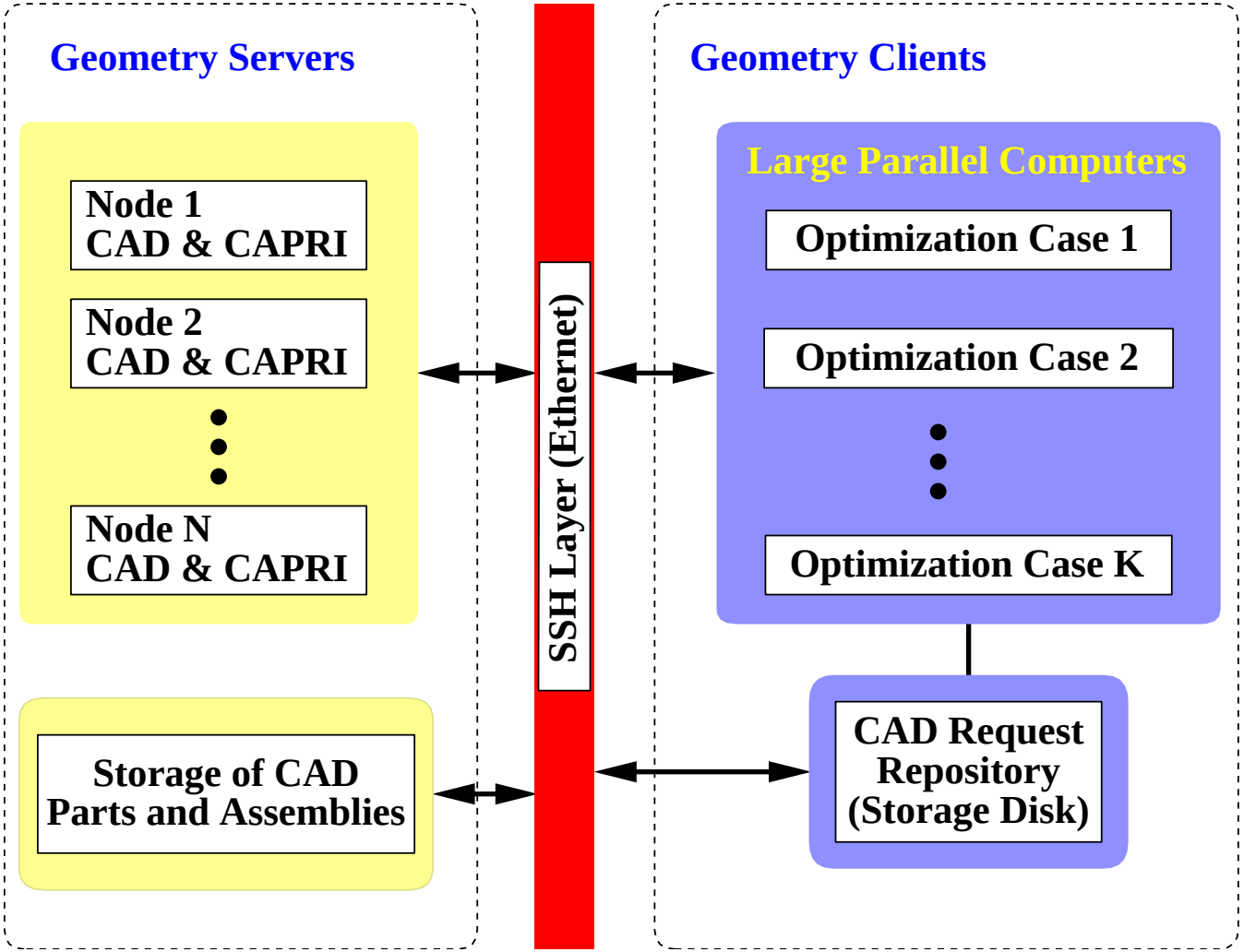
Geometry Servers
Node 1
CAD & CAPRI
Node 2
CAD & CAPRI
Node N
CAD & CAPRI
Storage of CAD
Parts and Assemblies
SSH Layer (Ethernet)
Geometry Clients
Large Parallel Computers
Optimization Case 1
Optimization Case 2
Optimization Case K
CAD Request
Repository
(Storage Disk)

Framework

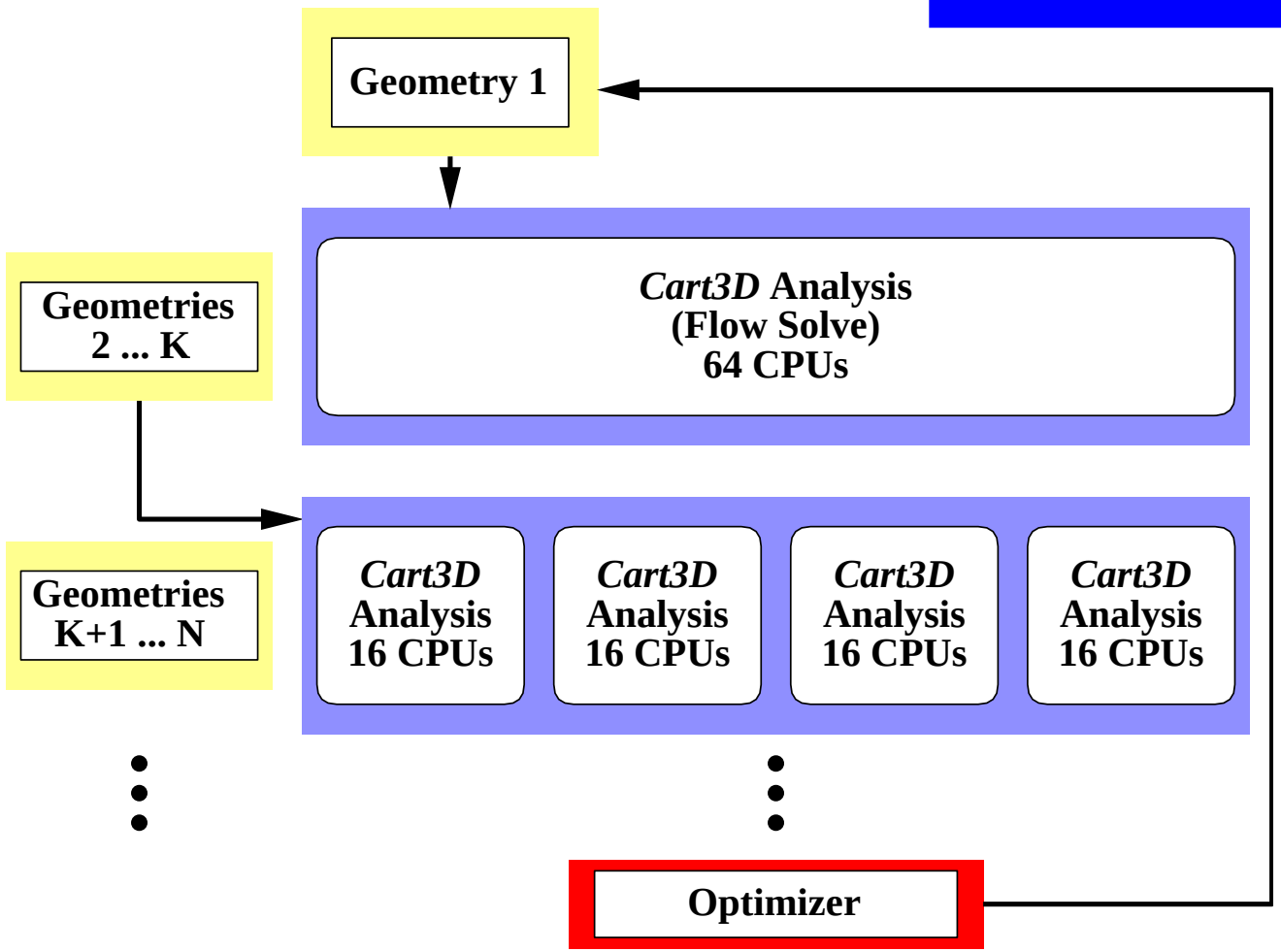

Dynamic re-allocation of processors to mask latency of CAD-geometry processing

Wallclock Time

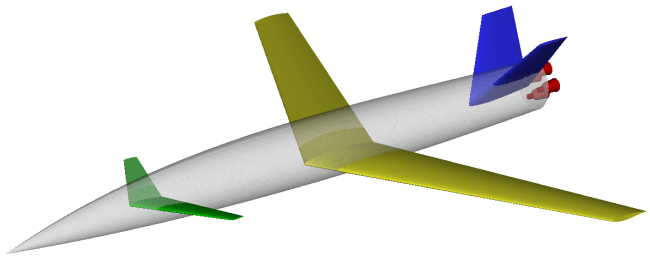

Part	CAD (sec.)	Triangulation (sec.)
Fuselage	2.0	93.3
Wing	3.0	16.5

Cart3D	**Wallclock Time (sec.)**
Mesh Generation (1.5 million cells)	132.0
Flow Solution (64 CPUs)	455.0

Results

2-D Design Example

- NACA 0012 airfoil: generic-wing CAD model
- Freestream Mach number=0.7, and angle of attack=3.0 deg.
- **Validate optimization infrastructure**
  1. CAD interface and optimization algorithms
  2. Study of noise in the objective function
- **Lift-constrained drag minimization**
  - Design Variables: 2 B-spline Control Points and Angle of attack

2-D Design

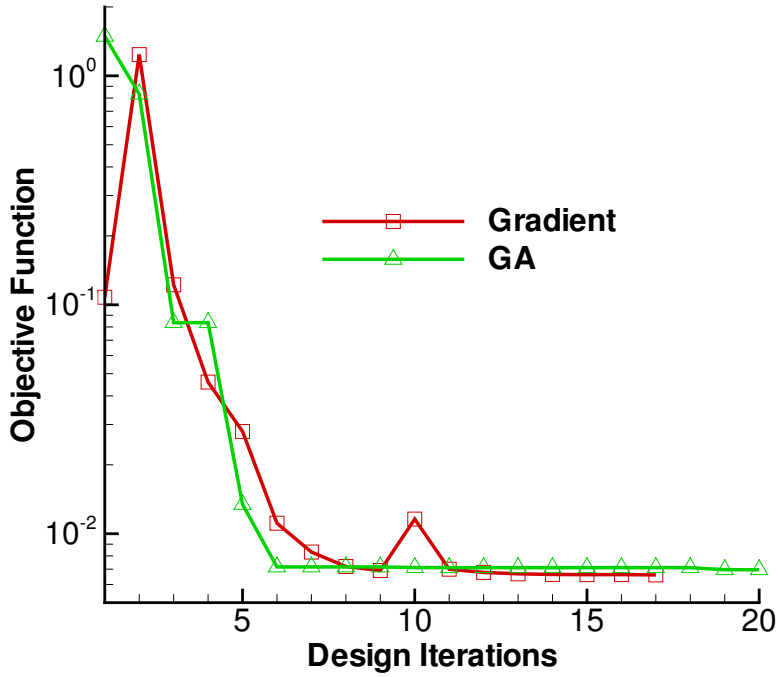
Objective Function
10^0
10^{-1}
10^{-2}
5
10
15
20
Design Iterations
Gradient
GA

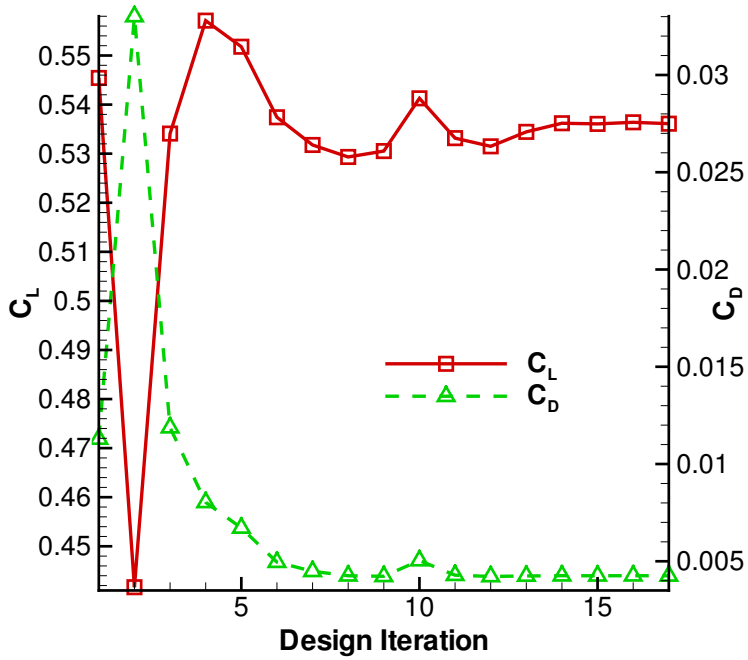
C_L
0.55
0.54
0.53
0.52
0.51
0.5
0.49
0.48
0.47
0.46
0.45
C_D
0.03
0.025
0.02
0.015
0.01
0.005
5
10
15
Design Iteration
C_L
C_D

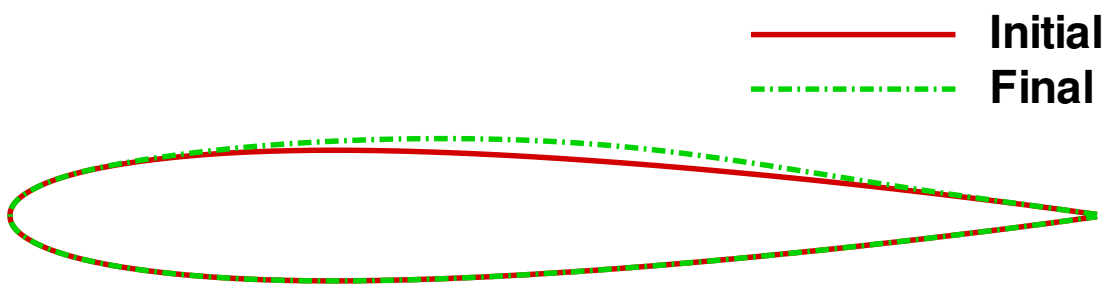
Initial
Final

Results

3-D Design Example

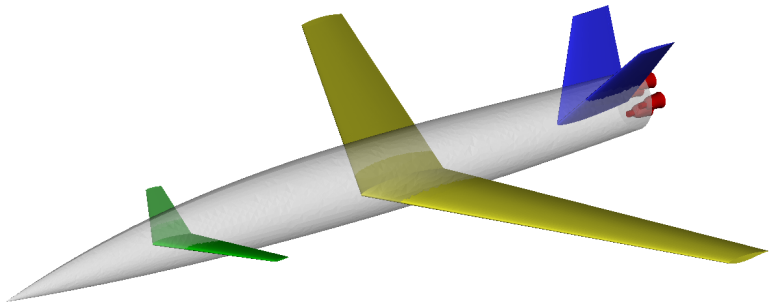

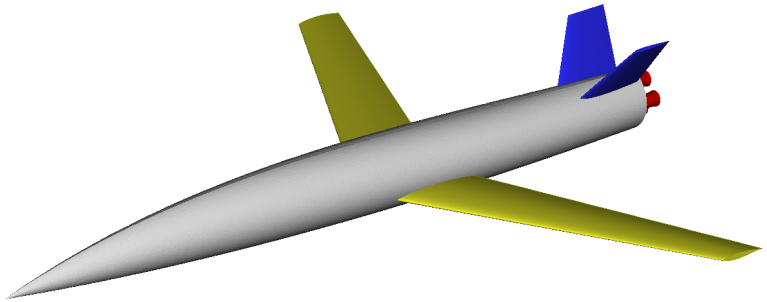

- **Objective: Trim configuration at fixed lift**
- Design Variables: Control surface horizontal position, aspect ratio, and twist
  - Additional D.V.: Control surface area for genetic algorithm
  - Possible topology changes

Results

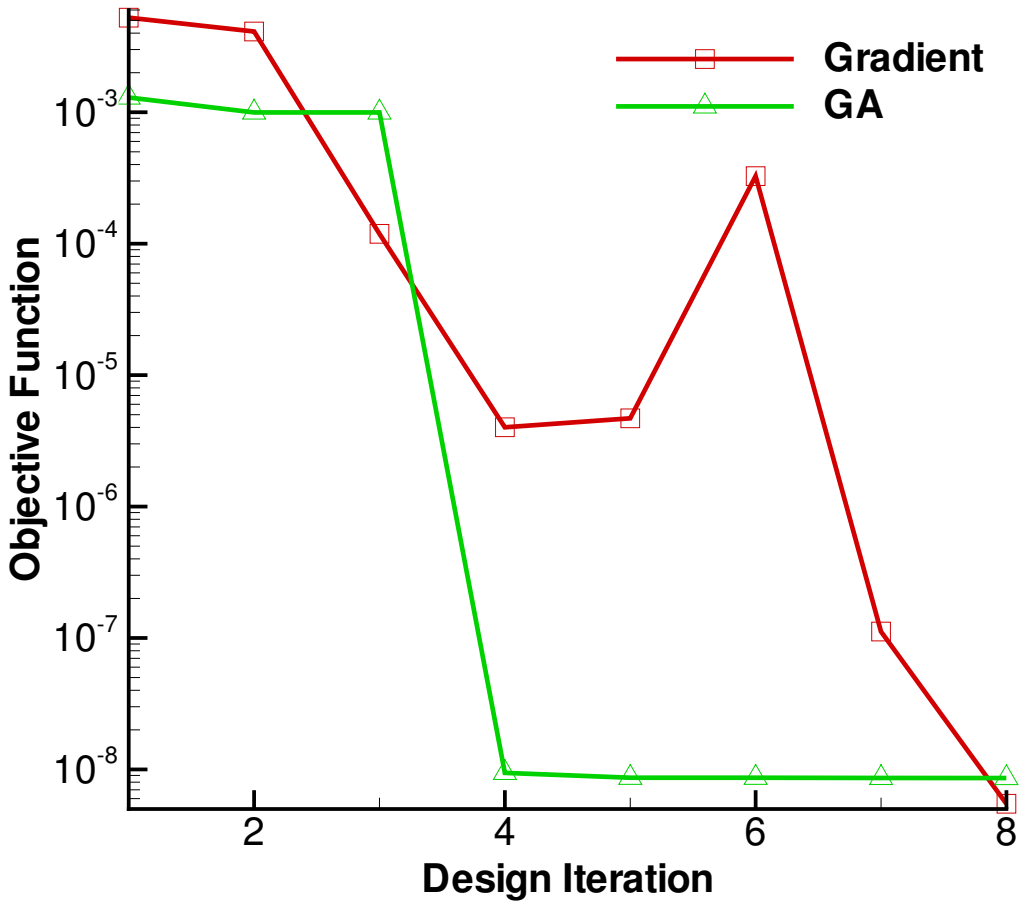

Pitching moment reduced by approx. 2 orders of magnitude

Results

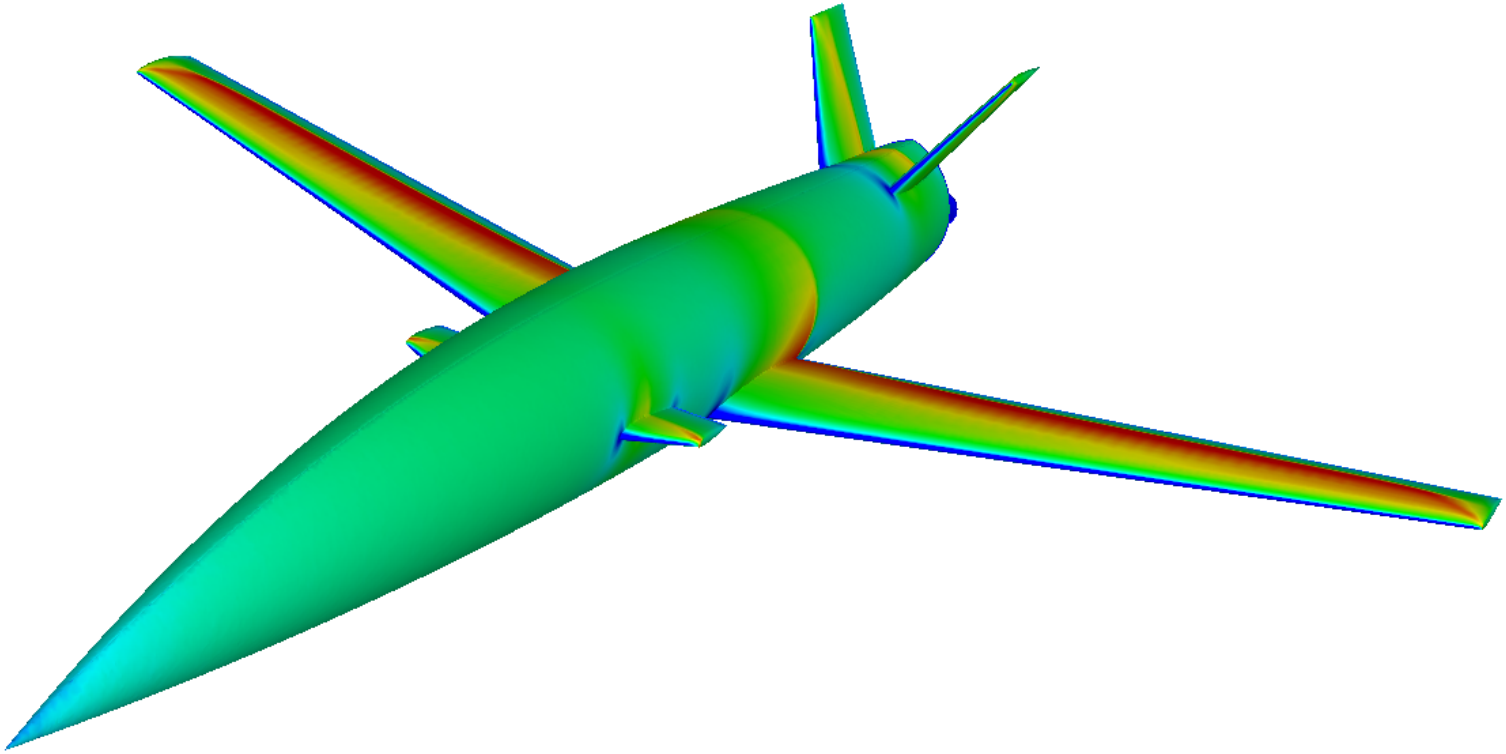

Quasi–Newton algorithm: Initial Design
Surface Mach number, $M_\infty = 0.85$, $\alpha = 1.0°$

Results

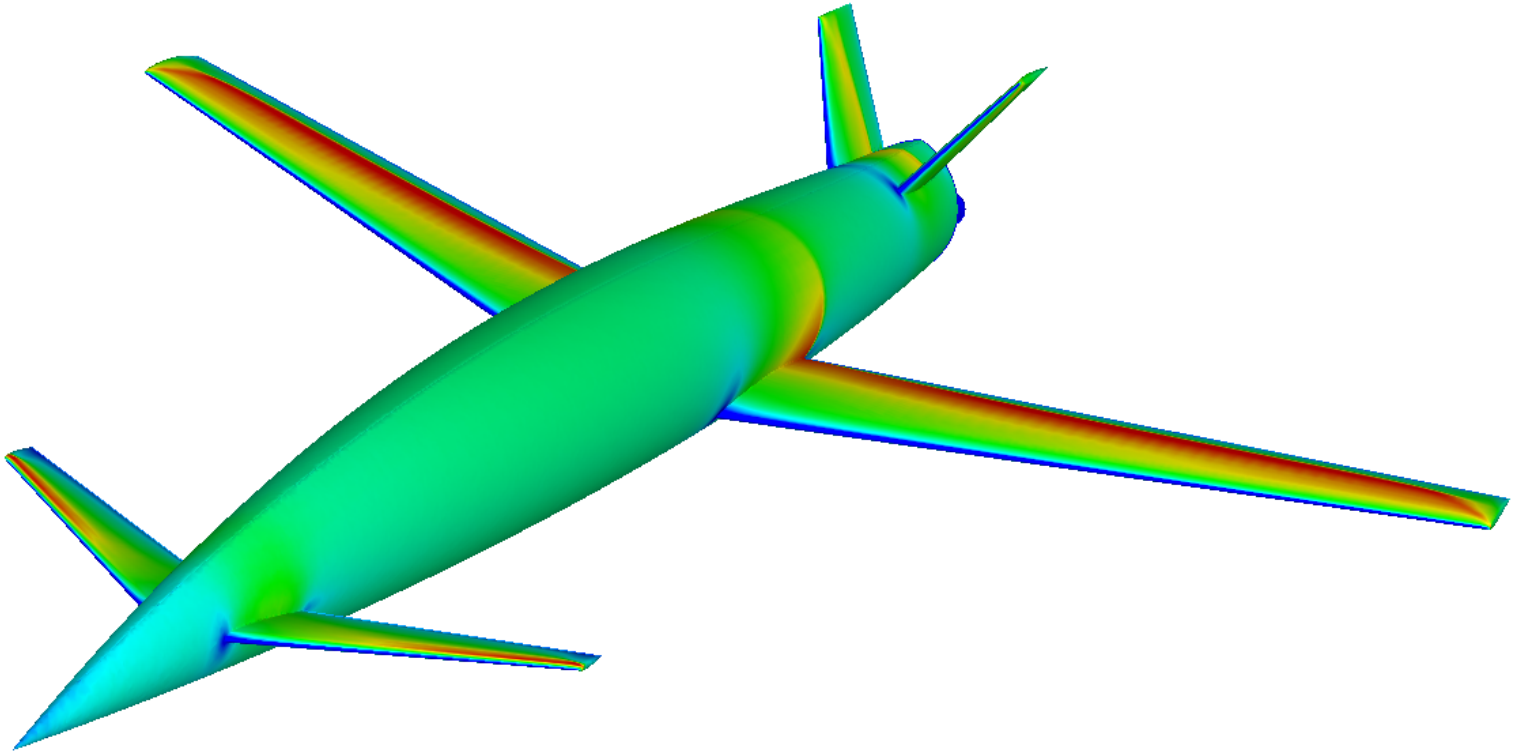

Quasi–Newton algorithm: Final Design
Surface Mach number, $M_\infty = 0.85$, $\alpha = 1.0°$

Results

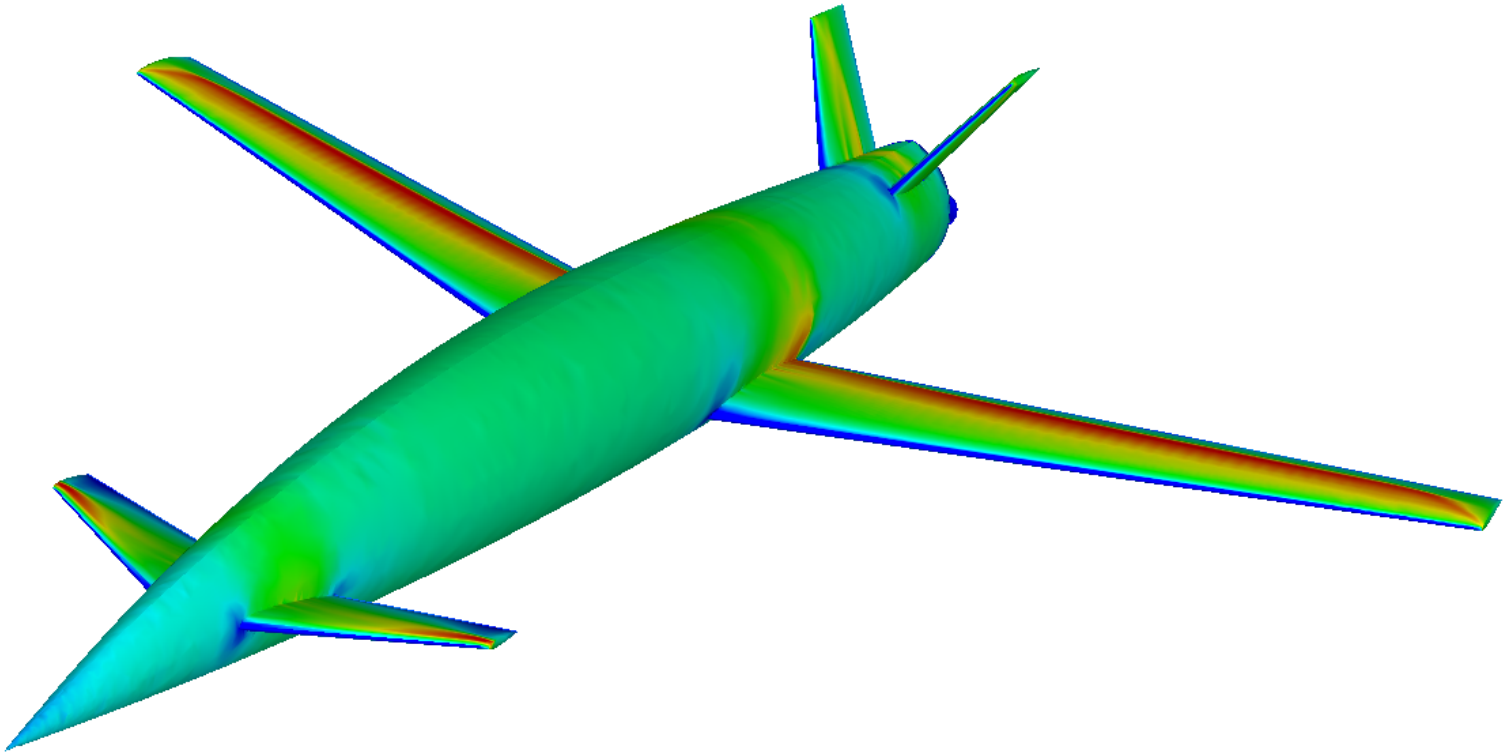

Genetic algorithm: Final Design
Surface Mach number, $M_\infty = 0.85$, $\alpha = 1.0°$

Conclusions

- **Validated optimization infrastructure**
  1. Geometry representation via parametric-CAD models
  2. Direct CAD-system interface using CAPRI
  3. Parallel geometry server
  4. Component-based Cartesian method
- **Fully automated for complex geometry**
- **Explored designs with shape and topology changes**

Future Work

- Application to “real-life” problems, noise issues
- Advanced optimization methods

Acknowledgments

- Robert Haimes (MIT)
- Funding: NRC Research Associateship Award